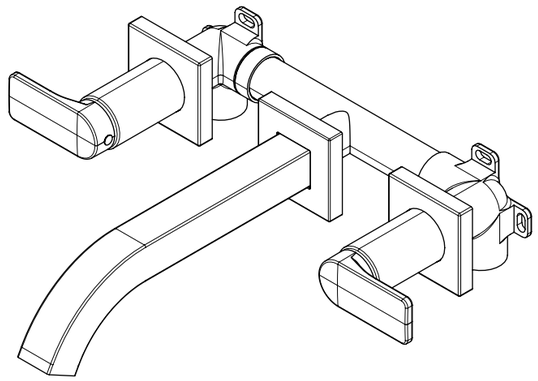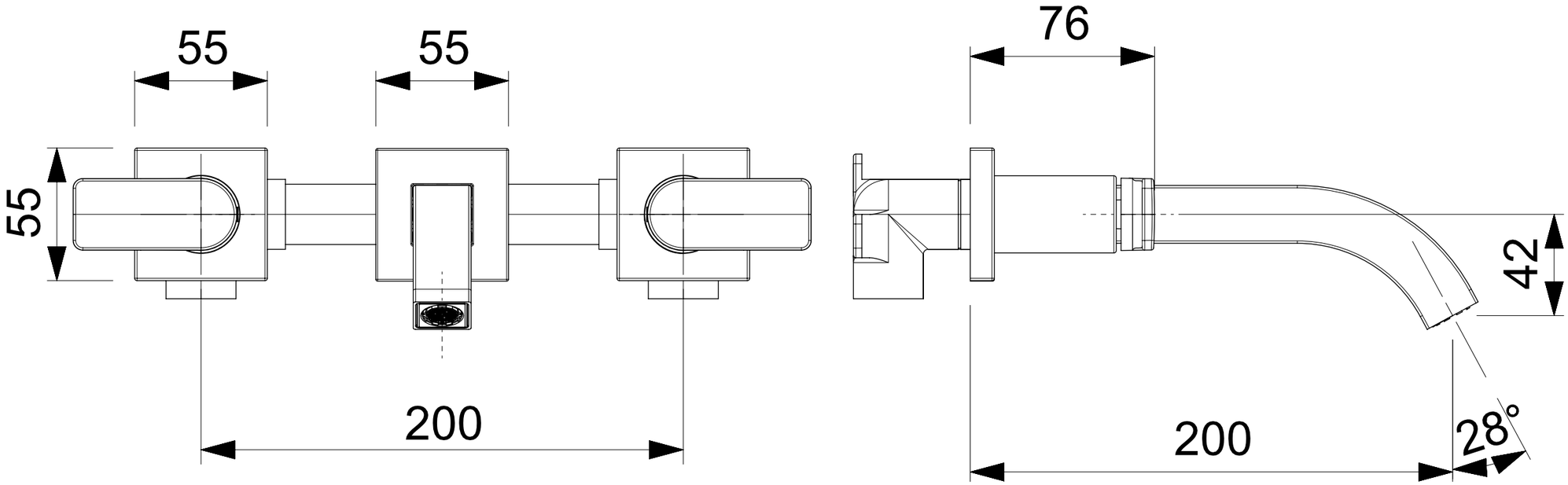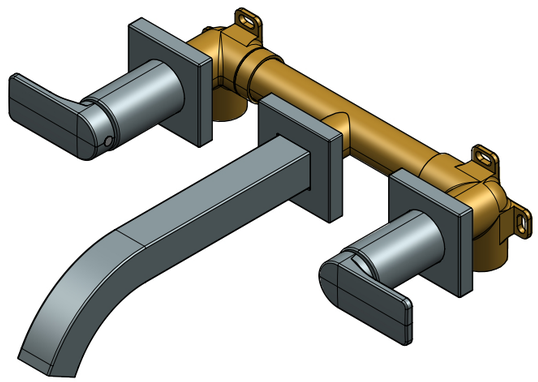NEO - B5002I2CRB